120W Single Output Switching Power Supply HLG-120H series



Features :

- Universal AC input / Full range (up to 305VAC)
- Built-in active PFC function
- High efficiency up to 93.5%
- Protections: Short circuit / Over current / Over voltage / Over temperature
- Cooling by free air convection
- OCP point adjustable through output cable or internal potentiometer
- IP67 / IP65 design for indoor or outdoor installations
- Type HL LED Driver for use in Class Ⅰ, Division 2 hazardous location luminaires
- Three in one dimming function (1~10Vdc or PWM signal or resistance)
- Suitable for LED lighting and street lighting applications
- Compliance to worldwide safety regulations for lighting
- Suitable for dry / damp / wet locations
- 7 years warranty (Note.10)

SELV IP65 IP67 Type HL

HLG-120H-12 A Blank : IP67 rated. Cable for I/O connection.
A : IP65 rated. Output voltage and constant current level can be adjusted through internal potentiometer.
B : IP67 rated. Constant current level adjustable through output cable with 1~10Vdc or 10V PWM signal or resistance.
D (option, safety pending) : IP67 rated. Timer dimming function, contact MEAN WELL for details.

SPECIFICATION

MODEL		HLG-120H-12	HLG-120H-15	HLG-120H-20	HLG-120H-24	HLG-120H-30	HLG-120H-36	HLG-120H-42	HLG-120H-48	HLG-120H-54
OUTPUT	DC VOLTAGE	12V	15V	20V	24V	30V	36V	42V	48V	54V
	CONSTANT CURRENT REGION Note.4	6 ~ 12V	7.5 ~ 15V	10 ~ 20V	12 ~ 24V	15 ~ 30V	18 ~ 36V	21 ~ 42V	24 ~ 48V	27 ~ 54V
	RATED CURRENT	10A	8A	6A	5A	4A	3.4A	2.9A	2.5A	2.3A
	RATED POWER	120W	120W	120W	120W	120W	122.4W	121.8W	120W	124.2W
	RIPPLE & NOISE (max.) Note.2	150mVp-p	150mVp-p	150mVp-p	150mVp-p	200mVp-p	200mVp-p	200mVp-p	200mVp-p	200mVp-p
	VOLTAGE ADJ. RANGE Note.6	10.8 ~ 13.5V	13.5 ~ 17V	17 ~ 22V	22 ~ 27V	27 ~ 33V	33 ~ 40V	38 ~ 46V	43 ~ 53V	49 ~ 58V
	CURRENT ADJ. RANGE	Can be adjusted by internal potentiometer A type only								
		5 ~ 10A	4 ~ 8A	3 ~ 6A	2.5 ~ 5A	2 ~ 4A	1.7 ~ 3.4A	1.4 ~ 2.9A	1.2 ~ 2.5A	1.1 ~ 2.3A
	VOLTAGE TOLERANCE Note.3	±2.5%	±2.0%	±1.0%	±1.0%	±1.0%	±1.0%	±1.0%	±1.0%	±1.0%
	LINE REGULATION	±0.5%	±0.5%	±0.5%	±0.5%	±0.5%	±0.5%	±0.5%	±0.5%	±0.5%
	LOAD REGULATION	±2.0%	±1.5%	±0.5%	±0.5%	±0.5%	±0.5%	±0.5%	±0.5%	±0.5%
	SETUP, RISE TIME Note.8	1200ms,50ms/115VAC 500ms,50ms/230VAC at full load ; B type 1200ms,200ms/115VAC 500ms,200ms/230VAC at 95% load								
	HOLD UP TIME (Typ.)	12ms at full load 230VAC / 115VAC								
INPUT	VOLTAGE RANGE Note.5	90 ~ 305VAC 127 ~ 431VDC								
	FREQUENCY RANGE	47 ~ 63Hz								
	POWER FACTOR (Typ.)	PF>0.98/115VAC, PF>0.95/230VAC, PF>0.93/277VAC at full load (Please refer to "Power Factor Characteristic" curve)								
	TOTAL HARMONIC DISTORTION	THD< 20% when output loading≧50% at 115VAC/230VAC input and output loading≧75% at 277VAC input								
	EFFICIENCY (Typ.)	92%	92%	93%	93%	93%	93%	93%	93.5%	93.5%
	AC CURRENT (Typ.)	1.4A / 115VAC 0.6A / 230VAC 0.55A / 277VAC								
	INRUSH CURRENT (Typ.)	COLD START 60A(twidth=375μs measured at 50% Ipeak) at 230VAC								
	MAX. No. of PSUs on 16A CIRCUIT BREAKER	5 units (circuit breaker of type B) / 9 units (circuit breaker of type C) at 230VAC								
	LEAKAGE CURRENT	<0.75mA / 277VAC								
PROTECTION	OVER CURRENT	95 ~ 108%								
		Protection type : Constant current limiting, recovers automatically after fault condition is removed								
	SHORT CIRCUIT	Constant current limiting, recovers automatically after fault condition is removed								
	OVER VOLTAGE	14 ~ 17V	18 ~ 21V	23 ~ 27V	28 ~ 34V	34 ~ 38V	41 ~ 46V	47 ~ 53V	54 ~ 63V	59 ~ 65V
		Protection type : Shut down o/p voltage with auto-recovery or re-power on to recovery								
	OVER TEMPERATURE	Shut down o/p voltage, recovers automatically after temperature goes down								
ENVIRONMENT	WORKING TEMP.	-40 ~ +70℃ (Refer to "Derating Curve")								
	WORKING HUMIDITY	20 ~ 95% RH non-condensing								
	STORAGE TEMP., HUMIDITY	-40 ~ +80℃, 10 ~ 95% RH								
	TEMP. COEFFICIENT	±0.03%/℃ (0 ~ 50℃)								
	VIBRATION	10 ~ 500Hz, 5G 12min./1cycle, period for 72min. each along X, Y, Z axes								
SAFETY & EMC	SAFETY STANDARDS Note.7	UL8750(type"HL"), CSA C22.2 No. 250.0-08, ENEC, TUV EN61347-1, EN61347-2-13 independent IP65 or IP67, J61347-1, J61347-2-13 approved ; design refer to UL60950-1, TUV EN60950-1								
	WITHSTAND VOLTAGE	I/P-O/P:3.75KVAC I/P-FG:2KVAC O/P-FG:1.5KVAC								
	ISOLATION RESISTANCE	I/P-O/P, I/P-FG, O/P-FG:100M Ohms / 500VDC / 25℃/ 70% RH								
	EMC EMISSION	Compliance to EN55015, EN55022 (CISPR22) Class B, EN61000-3-2 Class C (≧50% load) ; EN61000-3-3								
	EMC IMMUNITY	Compliance to EN61000-4-2,3,4,5,6,8,11, EN61547, EN55024, light industry level (surge 4KV), criteria A								
OTHERS	MTBF	192.2Khrs min. MIL-HDBK-217F (25℃)								
	DIMENSION	220*68*38.8mm (L*W*H)								
	PACKING	1.12Kg; 12pcs/14.4Kg/0.74CUFT								

NOTE

1. All parameters NOT specially mentioned are measured at 230VAC input, rated load and 25℃ of ambient temperature.
2. Ripple & noise are measured at 20MHz of bandwidth by using a 12" twisted pair-wire terminated with a 0.1uf & 47uf parallel capacitor.
3. Tolerance : includes set up tolerance, line regulation and load regulation.
4. Please refer to "DRIVING METHODS OF LED MODULE".
5. Derating may be needed under low input voltages. Please check the static characteristics for more details.
6. A type only.
7. Safety and EMC design refer to EN60598-1, CNS15233, GB7000.1, FCC part18.
8. Length of set up time is measured at cold first start. Turning ON/OFF the power supply may lead to increase of the set up time.
9. The power supply is considered as a component that will be operated in combination with final equipment. Since EMC performance will be affected by the complete installation, the final equipment manufacturers must re-qualify EMC Directive on the complete installation again.
10. Refer to warranty statement.
11. To fulfill requirements of the latest ErP regulation for lighting fixtures, this LED power supply can only be used behind a switch without permanently connected to the mains.

■ Mechanical Specification

Case No.994A Unit:mm

Blank:(HLG-120H)

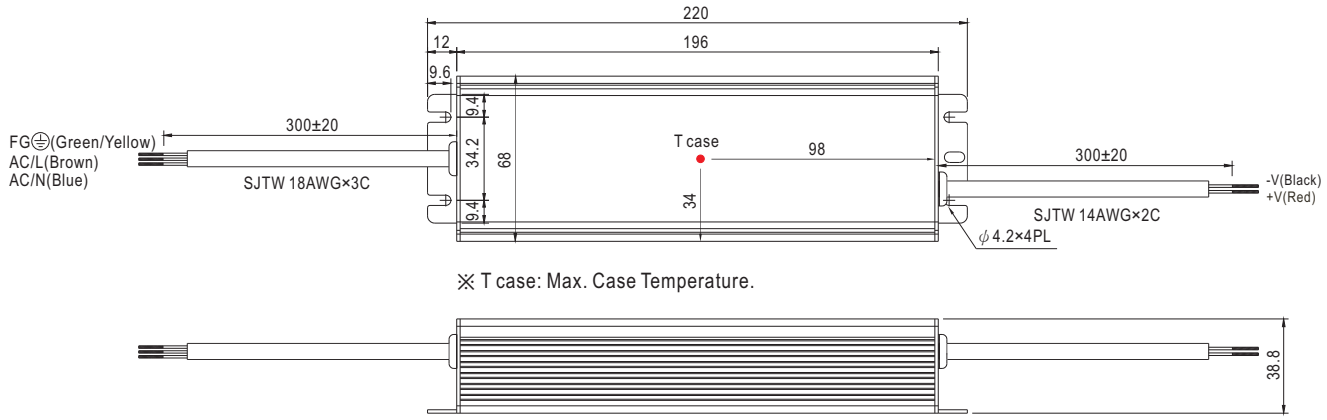

※ T case: Max. Case Temperature.

※IP67 rated. Cable for I/O connection.

A Type:(HLG-120H-_A)

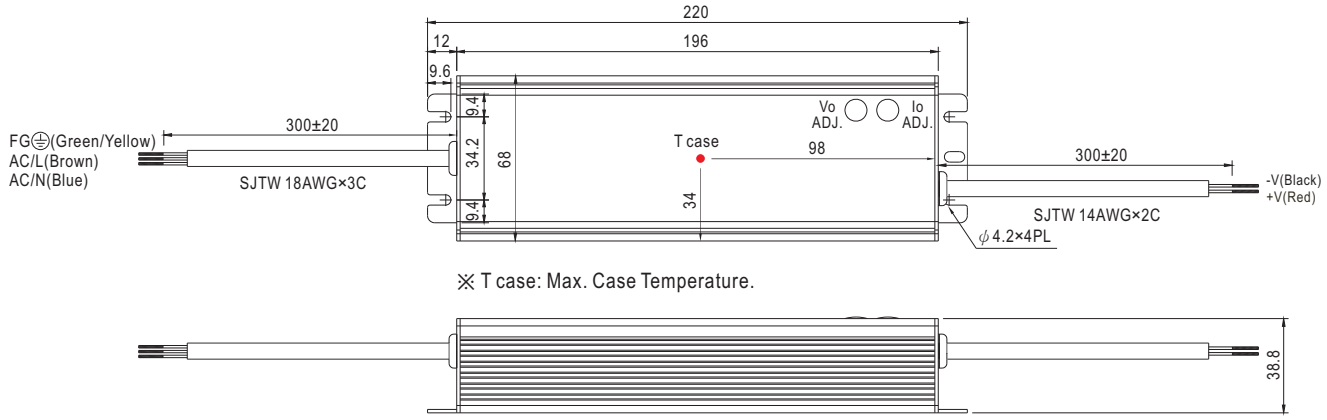

※ T case: Max. Case Temperature.

※ IP65 rated. Output voltage and constant current level can be adjusted through internal potentiometer.
(Can access by removing the rubber stopper on the case.)

B Type:(HLG-120H-_B)

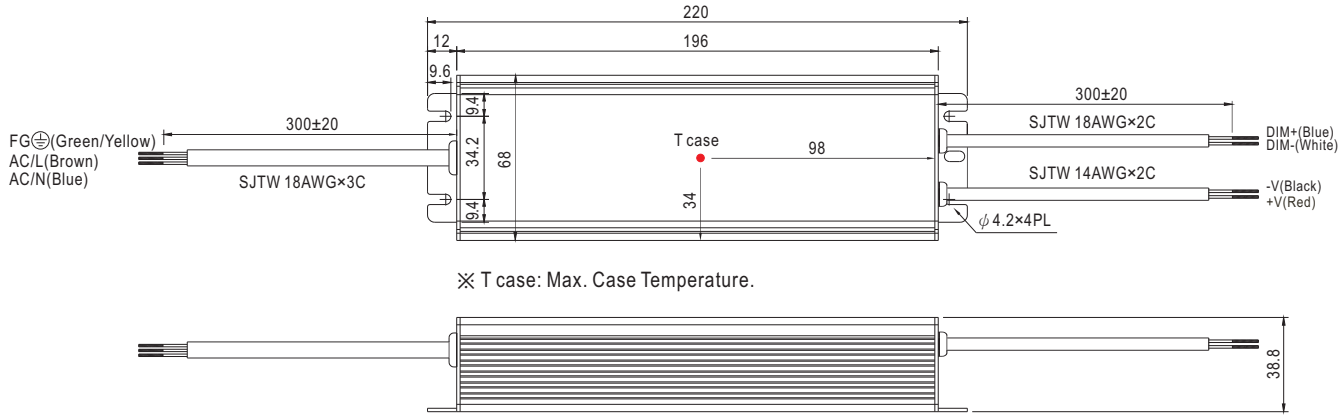

※ T case: Max. Case Temperature.

D Type(option):(HLG-120H-_D)

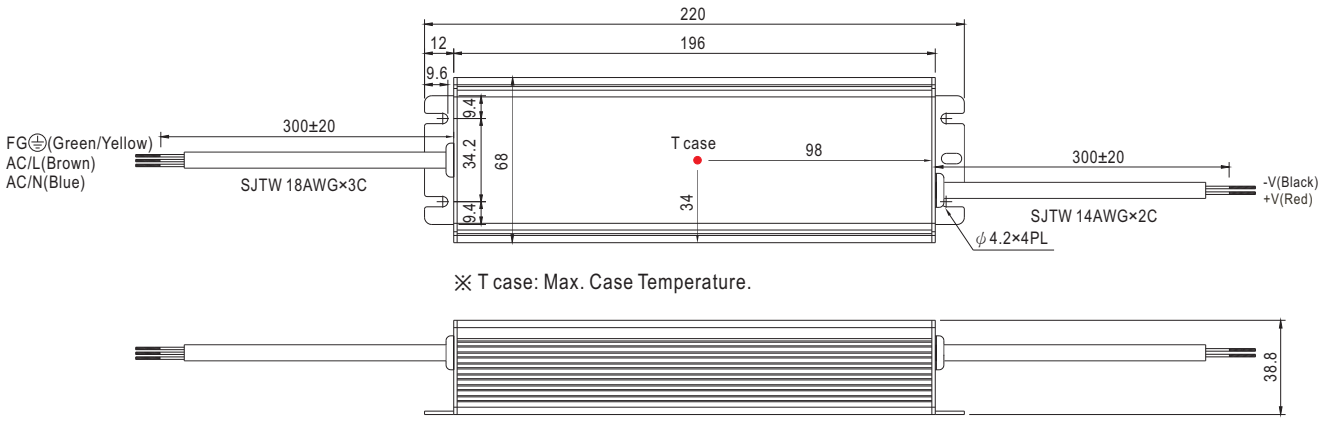

※ T case: Max. Case Temperature.

※ IP67 rated. Timer dimming function, contact MEAN WELL for details.

■ Block Diagram

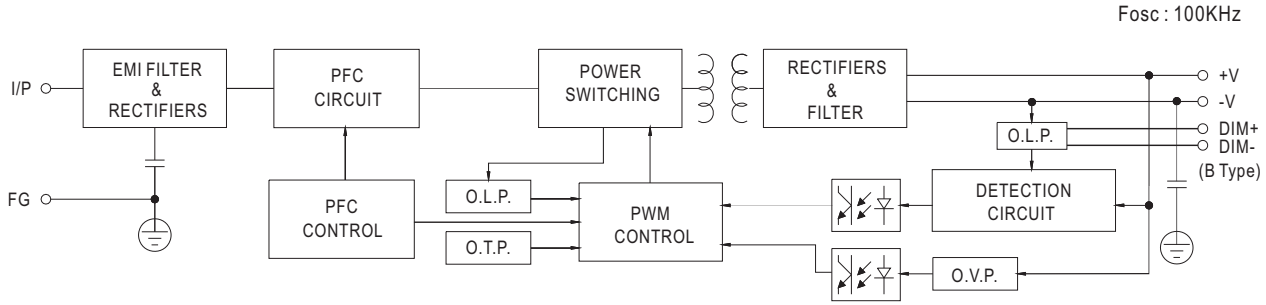

■ Derating Curve

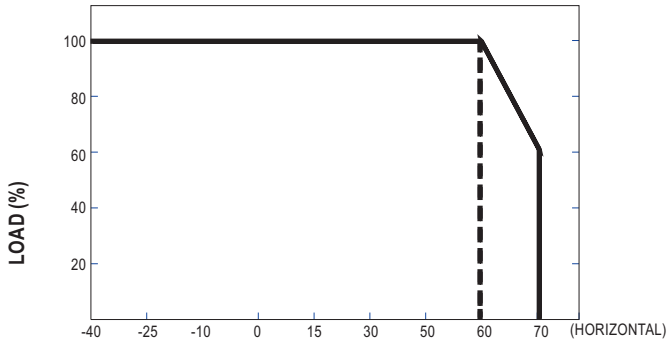

AMBIENT TEMPERATURE (℃)

■ Static Characteristics

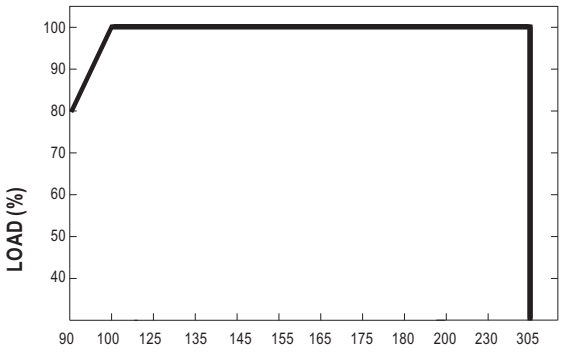

INPUT VOLTAGE (V) 60Hz

■ Power Factor Characteristic

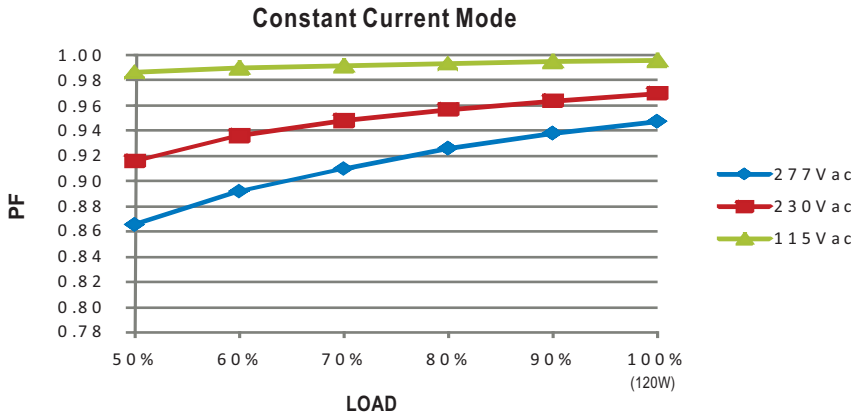

■ EFFICIENCY vs LOAD (48V Model)

HLG-120H series possess superior working efficiency that up to 93.5% can be reached in field applications.

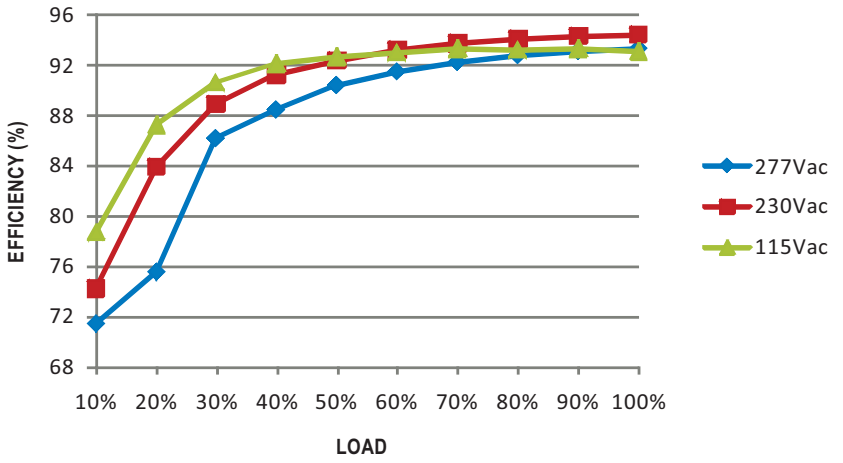

■ DRIVING METHODS OF LED MODULE

There are two major kinds of LED drive method "direct drive" and "with LED driver".
A typical LED power supply may either work in "constant voltage mode (CV) or constant current mode (CC)" to drive the LEDs.
Mean Well's LED power supply with CV+ CC characteristic can be operated at both CV mode (with LED driver, at area (A) and CC mode (direct drive, at area (B).

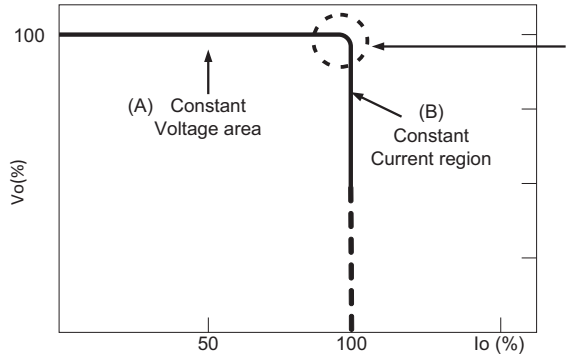

In the constant current region, the highest voltage at the output of the driver depends on the configuration of the end systems.
Should there be any compatibility issues, please contact MEAN WELL.

Typical LED power supply I-V curve

■ DIMMING OPERATION(for B-type only)

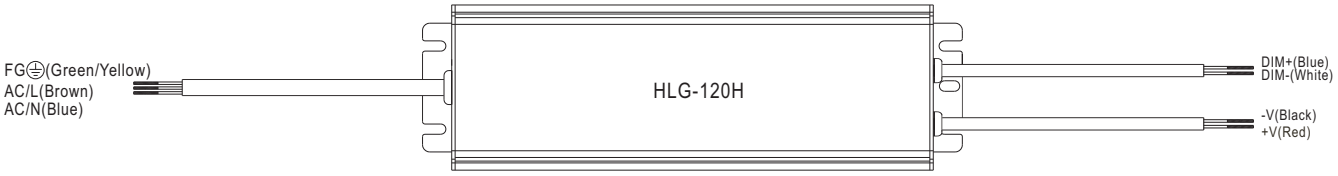

※ Built-in 3 in 1 dimming function, IP67 rated. Output constant current level can be adjusted through output cable by connecting a resistance or 1 ~ 10Vdc or 10V PWM signal between DIM+ and DIM-.

※ Please DO NOT connect "DIM-" to "-V".

※ Reference resistance value for output current adjustment (Typical)

Resistance value												
	Single driver	10KΩ	20KΩ	30KΩ	40KΩ	50KΩ	60KΩ	70KΩ	80KΩ	90KΩ	100KΩ	OPEN
	Multiple drivers (N=driver quantity for synchronized dimming operation)	10KΩ/N	20KΩ/N	30KΩ/N	40KΩ/N	50KΩ/N	60KΩ/N	70KΩ/N	80KΩ/N	90KΩ/N	100KΩ/N	-----
Percentage of rated current		10%	20%	30%	40%	50%	60%	70%	80%	90%	100%	95%~108%

※ 1 ~ 10V dimming function for output current adjustment (Typical)

Dimming value	1V	2V	3V	4V	5V	6V	7V	8V	9V	10V	OPEN
Percentage of rated current	10%	20%	30%	40%	50%	60%	70%	80%	90%	100%	95%~108%

※ 10V PWM signal for output current adjustment (Typical): Frequency range :100Hz ~ 3KHz

Duty value	10%	20%	30%	40%	50%	60%	70%	80%	90%	100%	OPEN
Percentage of rated current	10%	20%	30%	40%	50%	60%	70%	80%	90%	100%	95%~108%

※Using the built-in dimming function on B-type model can't turn the lighting fixture totally dark. Please refer to the connection method below to achieve 0% brightness of the lighting fixture connecting to the LED power supply unit.

※Direct connecting to LEDs is suggested, but is not suitable for using additional drivers.

Dimming connection diagram for turning the lighting fixture ON/OFF :

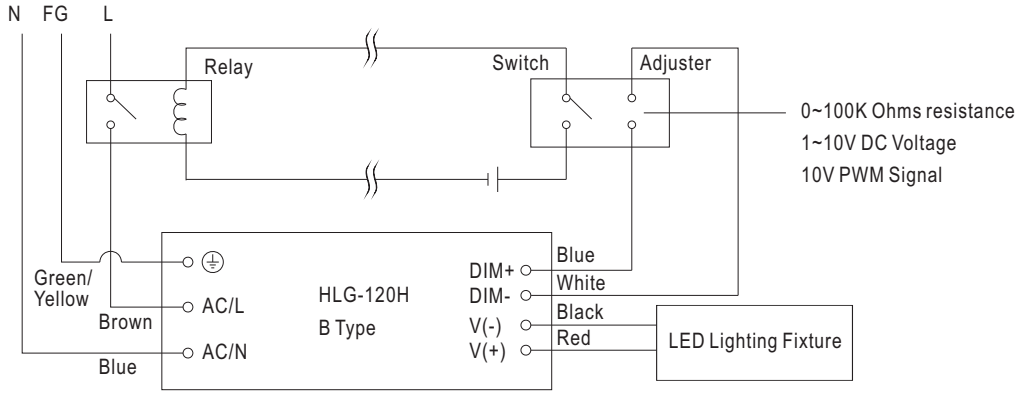

Using a switch and relay can turn ON/OFF the lighting fixture.

1.Output constant current level can be adjusted through output cable by connecting a resistance or 1~10Vdc or 10V PWM signal between DIM+ and DIM-.

2.The LED lighting fixture can be turned ON/OFF by the switch.

■ WATERPROOF CONNECTION

◎ Waterproof connector

Waterproof connector can be assembled on the output cable of HLG-120H to operate in dry/wet/damp or outdoor environment.

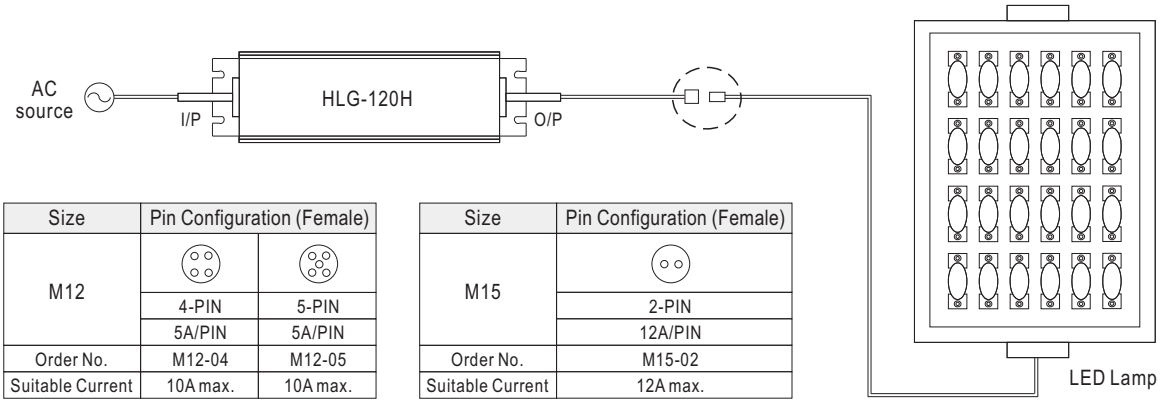

Size	Pin Configuration (Female)	
M12		
	4-PIN	5-PIN
	5A/PIN	5A/PIN
Order No.	M12-04	M12-05
Suitable Current	10A max.	10A max.

Size	Pin Configuration (Female)
M15	
	2-PIN
	12A/PIN
Order No.	M15-02
Suitable Current	12A max.

◎ **Cable Joiner**

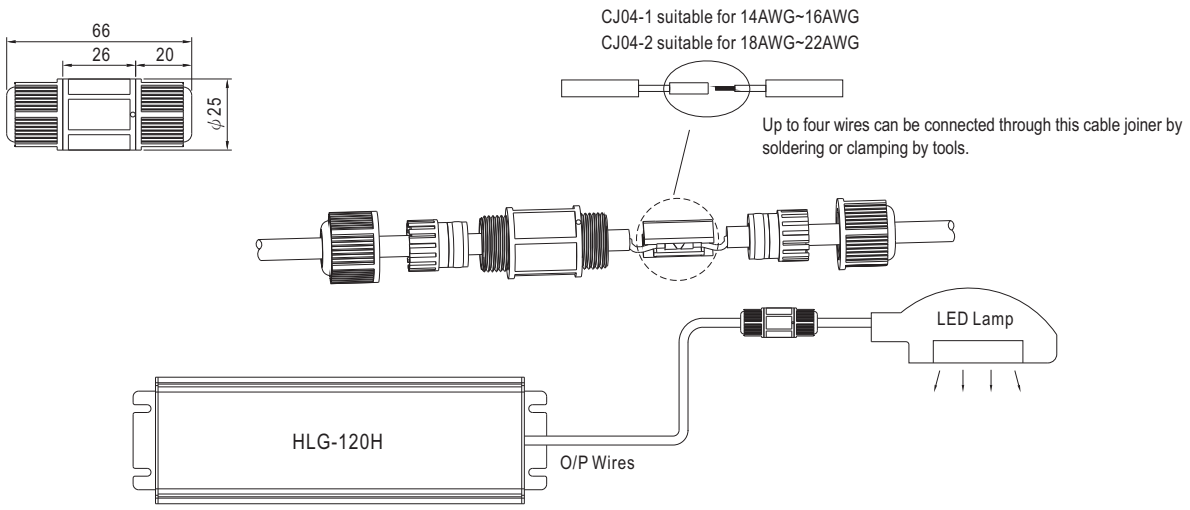

※CJ04 cable joiner can be purchased independently for user's own assembly.
MEAN WELL order No. : CJ04-1, CJ04-2.

◎ **Junction Box(Option)**

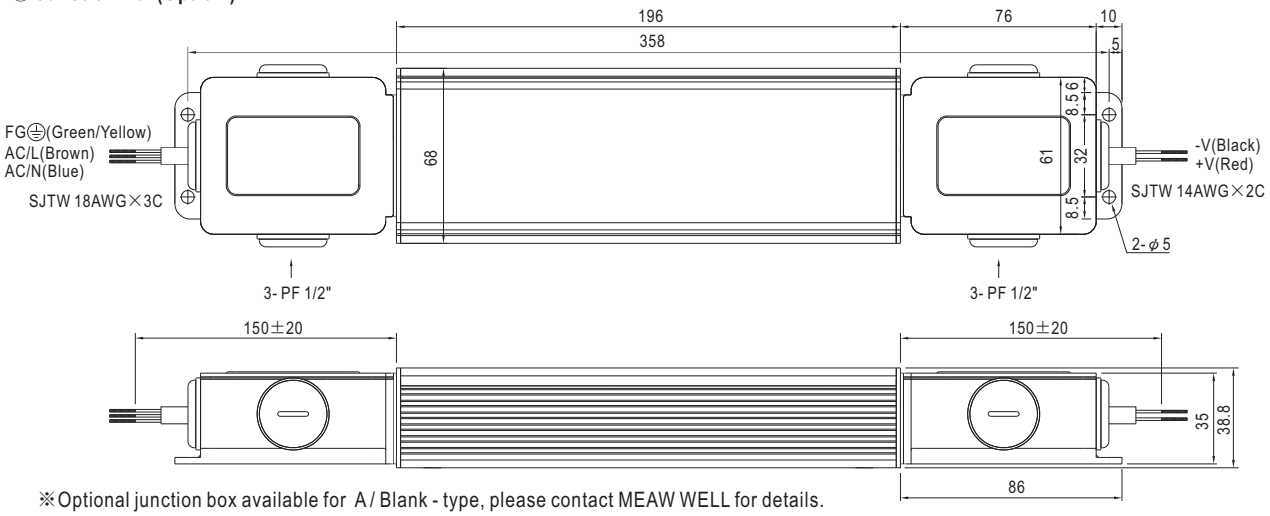

※Optional junction box available for A / Blank - type, please contact MEAW WELL for details.